Replacement Or Installation Instructions For Float Switch

⚠ WARNING **Disconnect the power of the pump before attempting to replace the switch.**
Works With Many Brands and Models of Submersible Sump and Sewage Pumps (Max. rating 13A at 125V).
Failure to follow these instructions may result in serious injury or death.

For Pump with an Existing Piggy-Back Float Switch

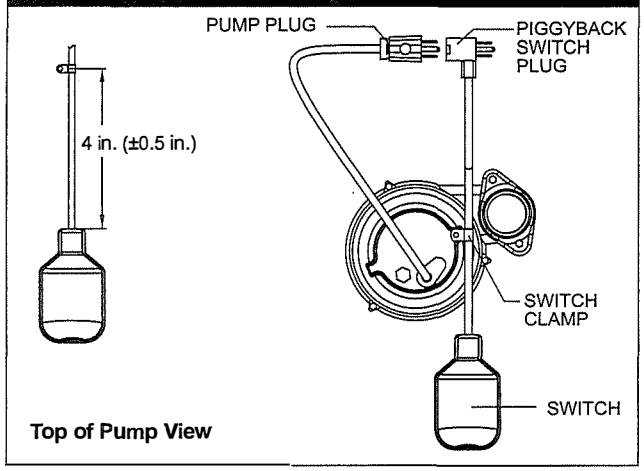

1. Disconnect all power from system before servicing.
2. Unplug the switch from the power outlet.
3. Remove pump from pit.
4. Make a mark of the old switch orientation with respect to pump.
5. Unplug the power cord from the Piggyback switch.
6. Unscrew the screw from the switch clamp.
7. Remove the old switch and clamp from the pump.
   Notice: Keep the old clamp and screw for next step use.
8. Check the distance between the float and clamp and adjust the distance to 4 in.(±0.5 in.). Screw the clamp and switch onto the pump.
9. Plug the power cord into the Piggyback switch.
10. Place the pump into the pit.
11. Secure the pump.
12. Plug the piggyback switch plug (with pump plug connected). Pump must be plugged into a GFCI receptacle..
13. Check the pump by filling the pit with water and observe the pump's operation through one complete cycle and make sure the pump cannot move in the pit and float switch moves freely up and down.

For Pump without an Existing Piggy-Back Float Switch (Shunt plug style float switch)

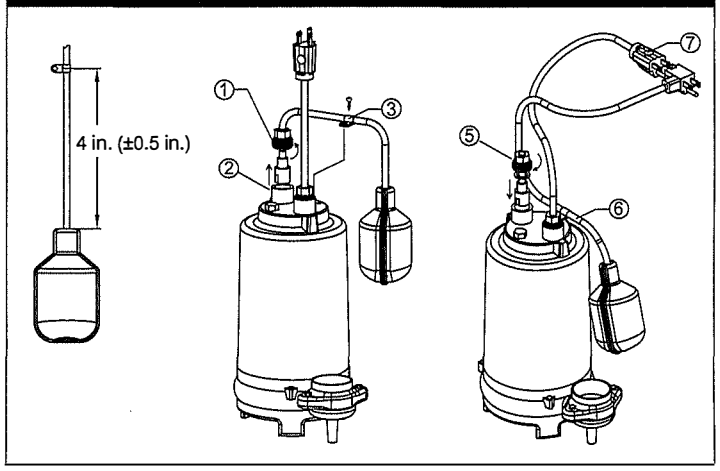

1. Disconnect all power from system before servicing.
2. This shunt plug is only approved to replace a plug of the same size.
3. Loosen the locking screw
4. Pull the shunt plug out
5. Loosen the clamp and remove the old float switch
6. Cut off the cord of old float switch from the locking nut, and take off the locking nut and washer as pictured below.
   Screw the locking nut back over the new shunt plug as pictured below.
   Prior to installation, the shunt plug mating area, including the threads, must be clean of debris and scale.

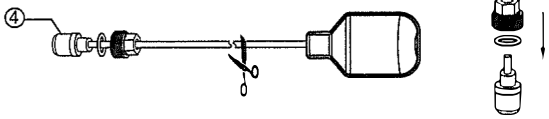

7. Insert the new included shunt plug so power can be diverted to new float switch. Use a wrench to firmly tighten the lock nut used to secure the shunt plug.
8. Use the original clamp included on the pump to install the new switch on to the pump. The length between clamp and switch (the floating ball) needs to be 4 in. (±0.5 in.).
   a. If pump does not have a clamp to hold the float switch cord, see "Pipe Installation" at right for further information.
9. Plug the pump power cord into the piggyback switch plug.
10. Plug the switch plug into a 115V GFCI power outlet. Pump must be plugged into a GFCI receptacle.
11. Check the pump by filling the pit with water and observe the pump's operation through one complete cycle and make sure the pump cannot move in the pit and float switch moves freely up and down.

Pipe Installation

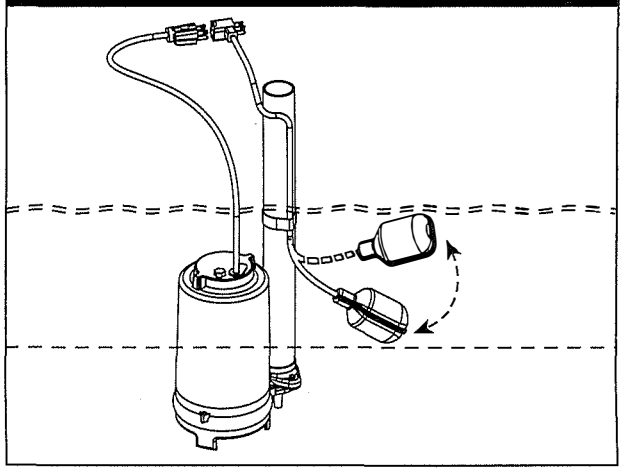

NOTE: If you do not have the old clamp or it is damaged, please use the included cable tie and electrical tape (sold separately) to secure the new float switch to the pipe.

1. Disconnect all power from system before servicing.
2. Attach cord to discharge pipe or convenient rigid surface. Do not tighten cable tie until turn "ON" turn "OFF" levels are established.
3. To increase the pump down level, increase the tether length (length between the float switch and cable tie). The length between the clamp and switch (the floating ball) needs to be 4 inches (± 0.5 in.).
4. Make sure float is at least 2 in. above the pump base in the turn "OFF" position. Make sure cable tie tether point is securely tightened.
5. Make sure switch has ample clearance in the sump for operation of the switch.
6. Plug the pump power cord in the piggy-back switch plug (note illustration), then plug the piggy-back switch cord into a GFCI receptacle. Pump must be plugged into a GFCI receptacle.
7. Check the pump by filling the pit with water and observe the pump's operation through one complete cycle and make sure the pump cannot move in the pit and float switch moves freely up and down.